ONDALUCE

CICIRIELLO SRL
S.P.231 KM 49.700
76123 ANDRIA(BT)
MADE IN CHINA

OTPL0011B

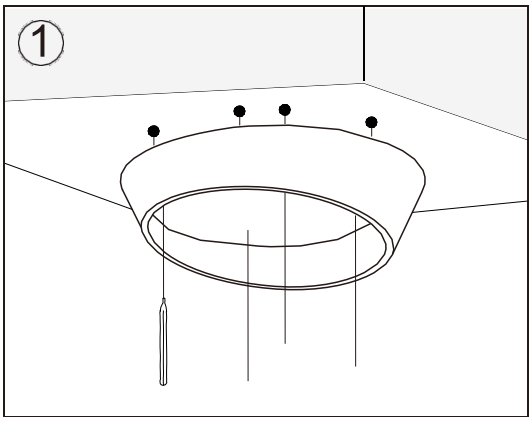

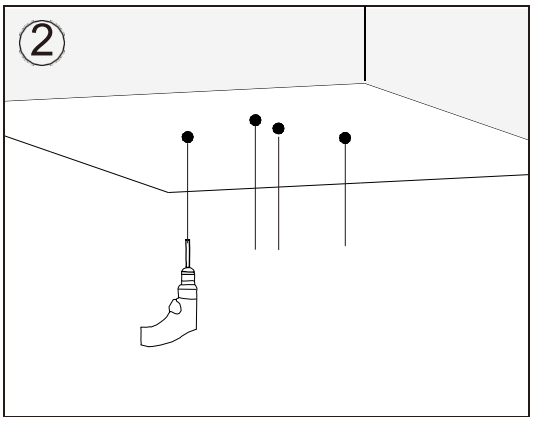

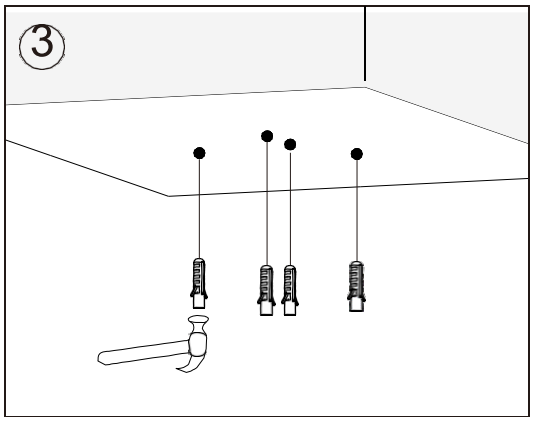

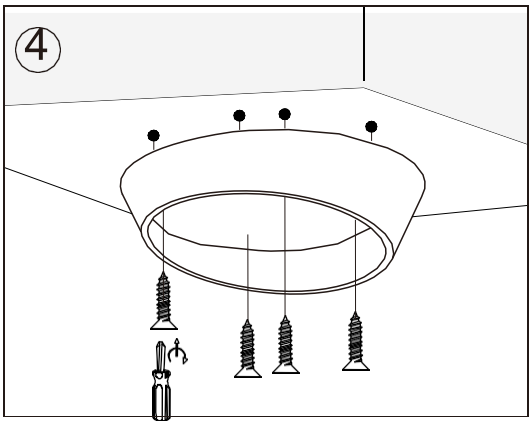

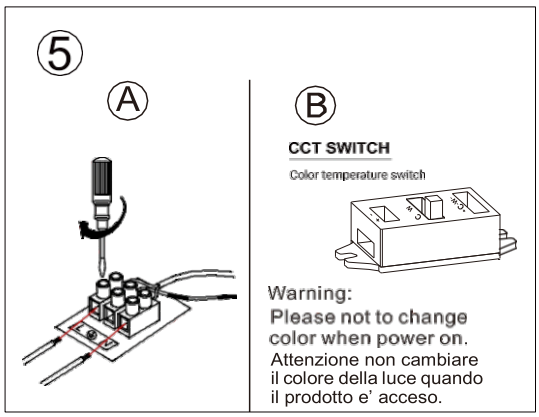

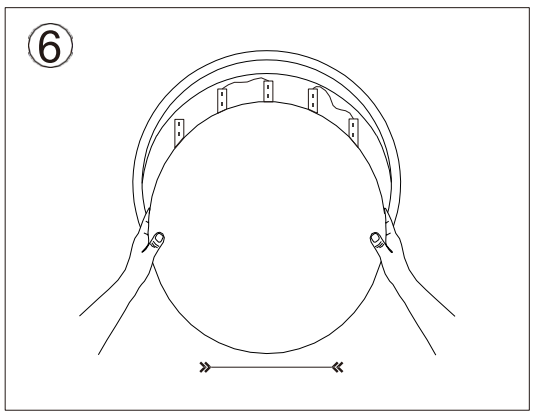

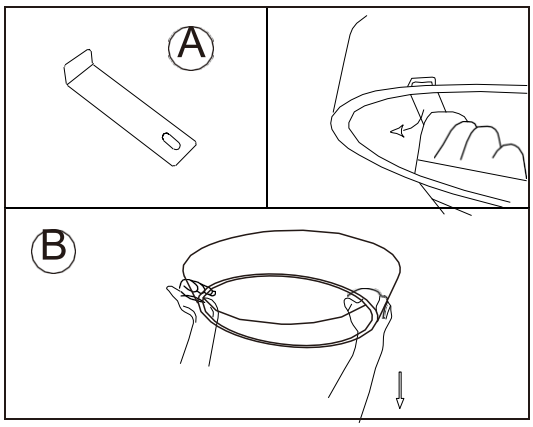

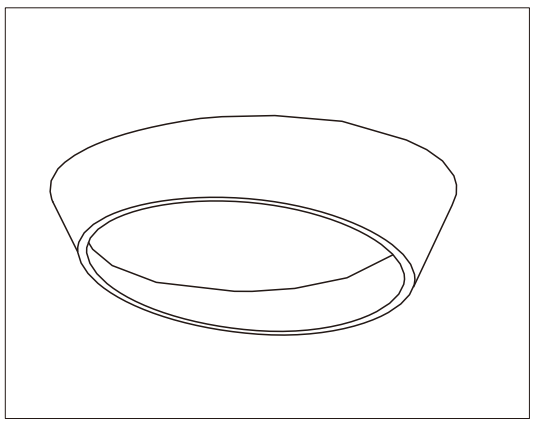

Ciciriello srl, S.P. 231 KM 49.700, 76123 ANDRIA(BT)
assistenzaondaluce@ciciriellogroup.com